ILLUMINATOR DATA

LTZZO050-90-1-B-24V

Lighting Dimension

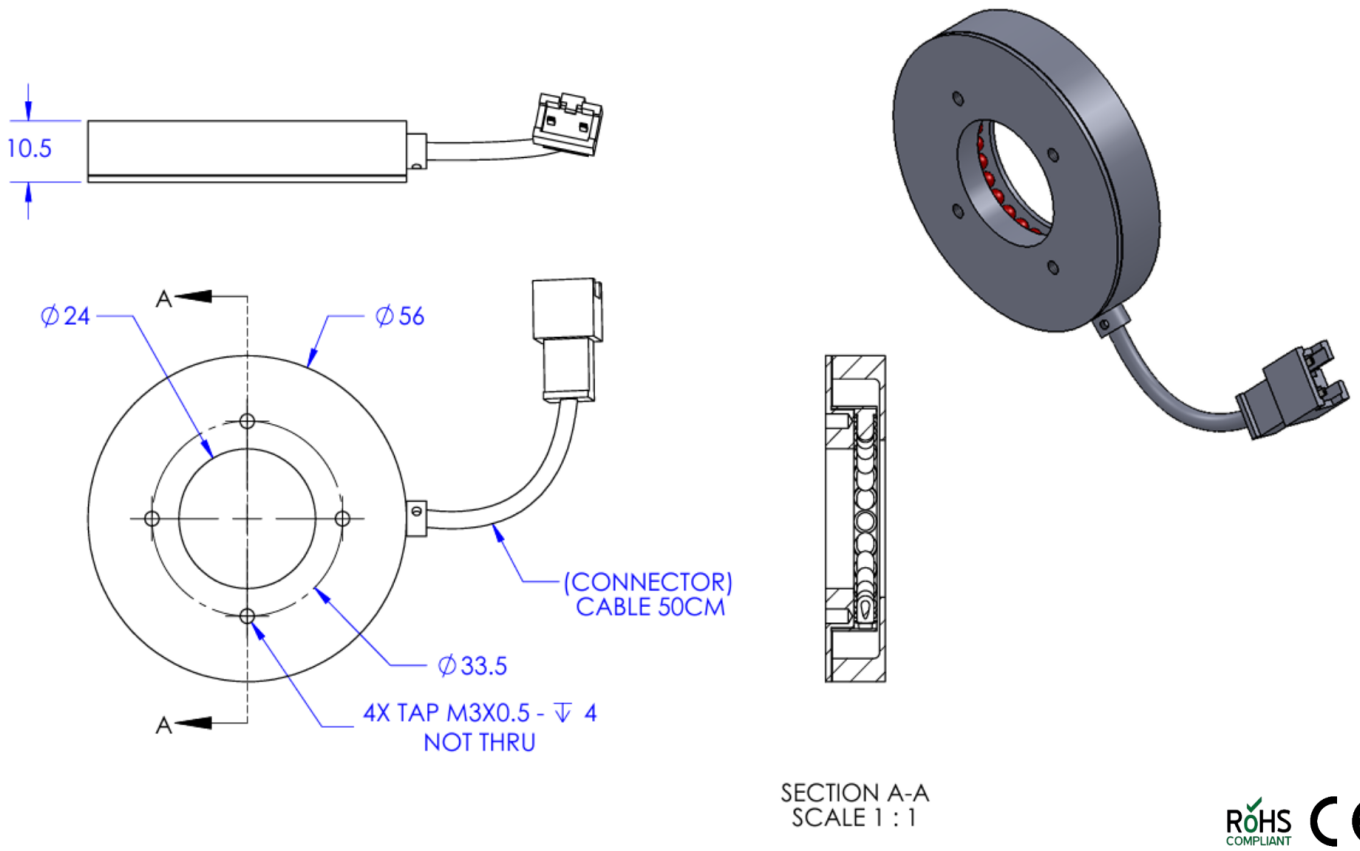

Mechanical Information	
Casing Material	Aluminium
Storage Temperature Range	0 - 45°C
Storage Humidity Range	20 - 85%
Weight	50g
Width / Inner Diameter	24mm
Length / Outer Diameter	56mm
Height / Thickness	10.5mm

ILLUMINATOR DATA

LTZZO050-90-1-B-24V

Lighting Information			
LED Color	BLUE		
Wavelength	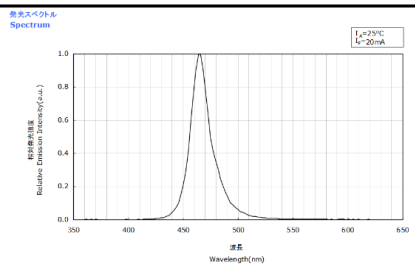 465 nm		
Working Distance	5mm	10mm	15mm
Intensity (±15%)	1997lx	6390lx	3120lx
Illumination (Number of Row)	1		
Illumination Active Area	Active Outer Diameter	27	
	Active Inner Diameter	24	
Emission Angle	90°		
Eye Safety Class (IEC62471)	EXEMPT Products with sources, which do not pose any potential photobiological hazard even for the continuous and unrestricted exposure. Example: 8 hours of exposure poses no acute hazard to either eye or skin, and 10,000 seconds (2.8 hours) of the intent starting causes no blue light retinal hazard.		
Chromaticity Table For White Colour Only	Color Rank		

	Rank W			
x	0.11	0.11	0.15	0.15
y	0.04	0.10	0.10	0.04

* Ranking at T_A=25°C.
* Tolerance of measurements of the Forward Voltage is ±3%.
* Tolerance of measurements of the Luminous Intensity is ±10%.
* Tolerance of measurements of the Chromaticity Coordinate is ±0.01.
* A shipment shall consist of LEDs in a combination of the above ranks. The percentage of each rank in the shipment shall be determined by Nichia.

Electrical Information	
Rated Voltage	$24V_{(Min)}$ - $24V_{(Max)}$
Rated Current	60mA
Power Consumption	1.440W
Casing Temperature, After 60 minutes operation	60°C

Strobe Mode Specification		
*Normal Strobe Voltage	24V	
*Normal Strobe Current	60mA	
Overdrive Voltage Range	Min: 36V	Max: 48V
Overdrive Current Range	Min: 169mA	Max: 278mA
Recommended Overdrive Voltage	36V	
**Max. Trigger Pulse Duration	10%	
**Max. Duty Cycle	10msec	

*Normal strobe means the lighting is operated using the rated power. Overdrive means the power supplied to the lighting exceeded the rated power.

**Overdrive condition must not exceed the max. trigger pulse duration and max. duty cycle.

ILLUMINATOR DATA

LTZZO050-90-1-B-24V

Connection Information			
Connector Type	JST SMR-03V-B		
Cable Length	500mm		
Pin Configuration	**Pin**	**Signal**	**Cable Color**
	1	24V	RED
	2	-	-
	3	GND	WHITE / BLACK

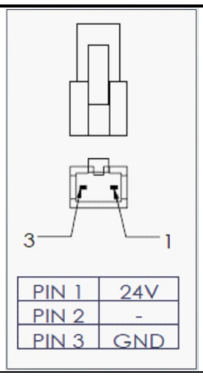

Additional Information	
Additional Cooling Method	Attached to machine part for better heat dissipation
Intensity Controller Selection	LTIC series
CE Conformity	YES
RoHS Compliance	YES

Application	
Illumination Type	Direct, Low Angle, Ring Illumination
Application Use	• Edge detection • Scratched on metal or glossy surface

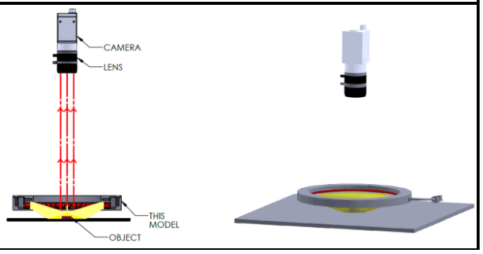

ILLUMINATOR DATA

LTZZO050-90-1-B-24V

Lighting Pattern				
Working Distance	For further details, please contact us			
Display and Image	For further details, please contact us			
Data Results	Horizontal	Meas. (mm)	Vertical	Meas. (mm)
	90%	N.A.	90%	N.A.
	90%	N.A.	90%	N.A.
	80%	N.A.	80%	N.A.
	70%	N.A.	70%	N.A.
	60%	N.A.	60%	N.A.
	50%	N.A.	50%	N.A.
	40%	N.A.	40%	N.A.
	30%	N.A.	30%	N.A.
	20%	N.A.	20%	N.A.
	10%	N.A.	10%	N.A.